WASHLET™

SW, incl. remote controller

DE: SW, inkl. Fernbedienung
FR: SW, télécommande incluse
IT: SW, incl. telecomando
RU: RW, включая дистанционное управление

PRODUCT DETAILS	
Product code	TCF803CG
GTIN (EAN)	40 50663 09570 3
Size	w:391xd:579xh:108 (mm)
Weight	8,6 kg
Colour	White
Technologies	Warm water nozzle, heated seat, Deodorizer, Dryer, EWATER+ for nozzle, EWATER+ for ceramic, Auto functions, PREMIST, Decalcification program

WRAS APPROVED PRODUCT
CERTIFICATION MARK

CAN BE COMBINED WITH	
SP WC, wall-hung, just to be used for the mentioned WASHLET™	CW522EY

Weights and measurements shown may be subject to small variations or are indicative.
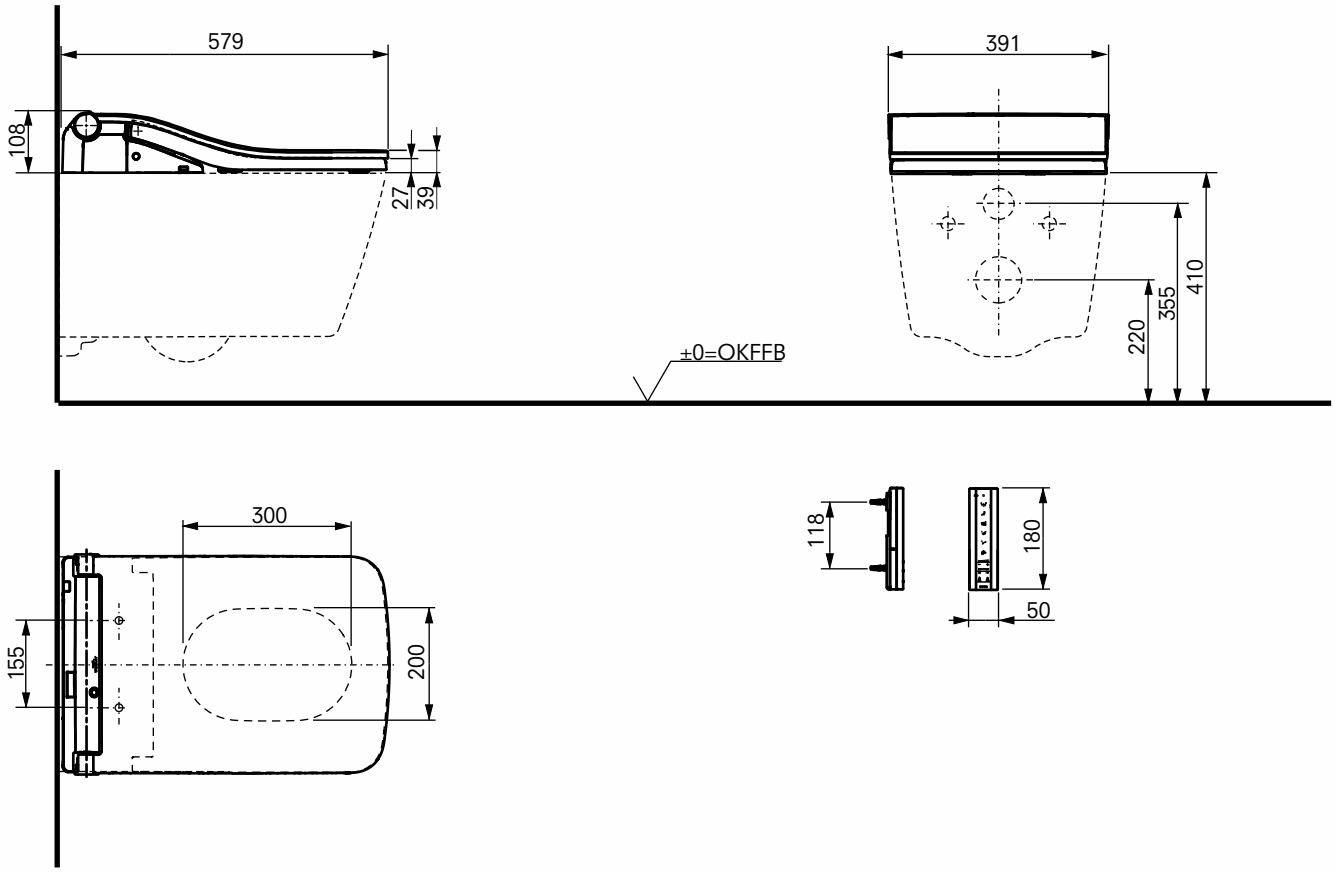
TECHNICAL DRAWINGS