MH SERIES

Toothbrush tumbler (tumbler: ceramic)

DE: Zahnputzbecher
FR: porte-brosse à dents
IT: porta spazzolino da denti
RU: Стакан и держатель
ES: portavaso

PRODUCT DETAILS	
Product code	YA10274U(A)
EAN code	40 50663 09072 2
Size	w:93xd:110xh:113 (mm)
Weight	0.68 kg
Colour	Chrome

Weights and measurements shown may be subject to small variations or are indicative.
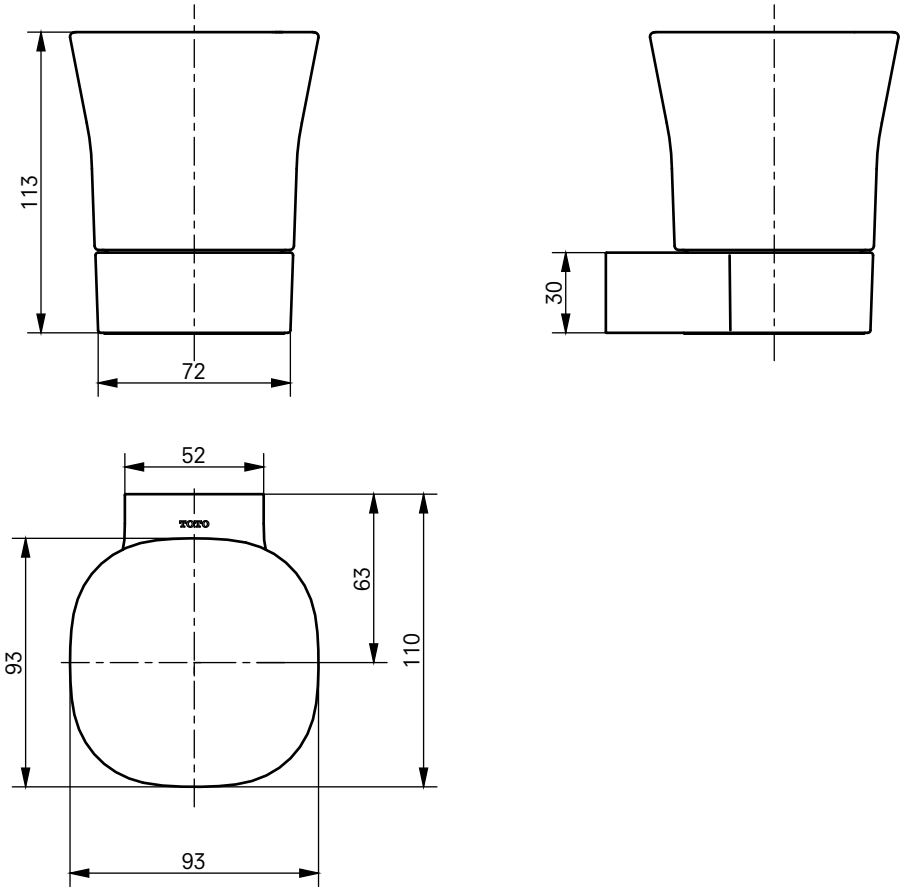
TECHNICAL DRAWINGS