TOTO | **FAUCETS**

TRG01301B

GO Series
Bidet Faucet
w/ pop-up waste

Features

- *Design concept is gorgeous and organic*

Specifications

Finish	*: Chrome*
Material	*: Brass*

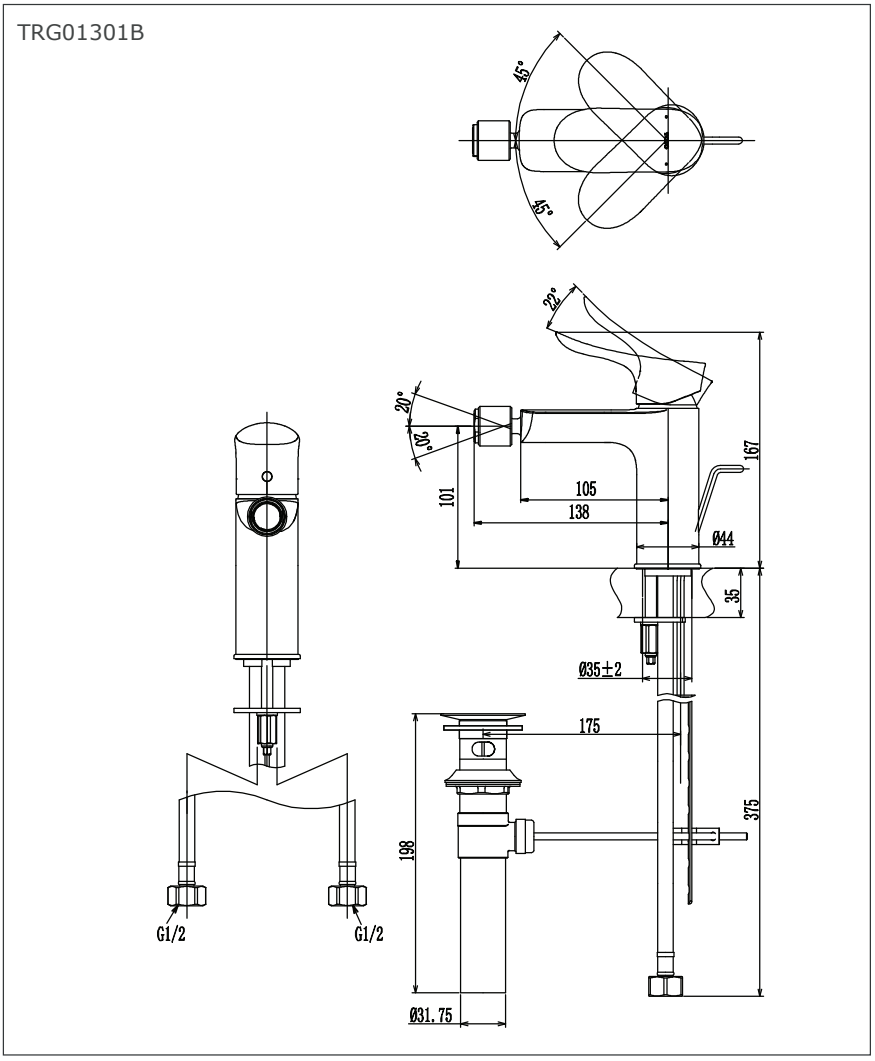

Parts Description

- ***TRG01301B***
  Bidet Faucet
  w/ Pop-up waste

Please consult a TOTO representative for details

All rights reserved by TOTO company. Specifications and sizes are subject to change without notice.

Flow Rate

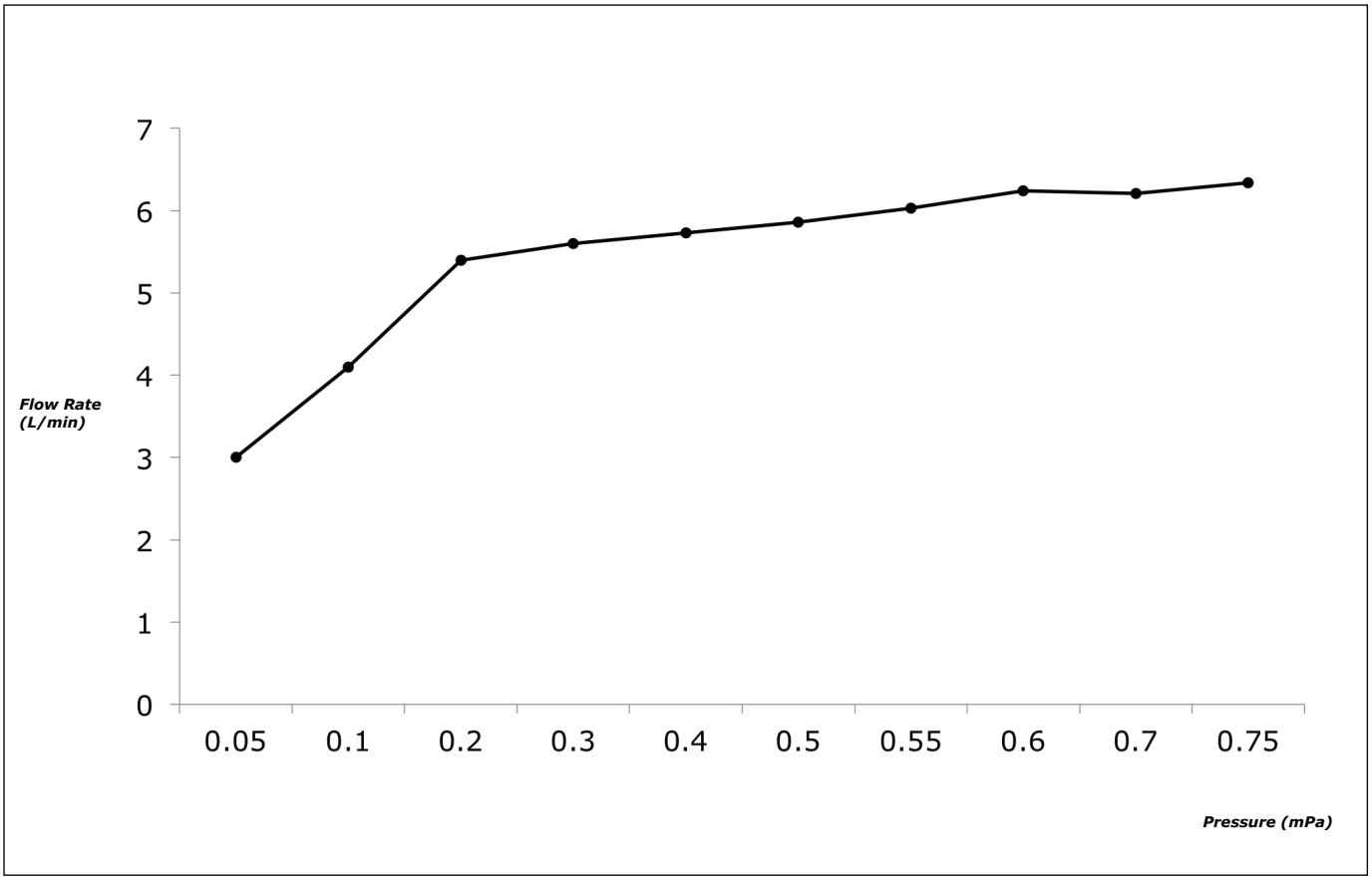
7
6
5
4
3
2
1
0
Flow Rate (L/min)
0.05
0.1
0.2
0.3
0.4
0.5
0.55
0.6
0.7
0.75
Pressure (mPa)